MARK FITNESS

# XM-4428

## 45 DEGREE HYPEREXTENSION

## Owner's Manual

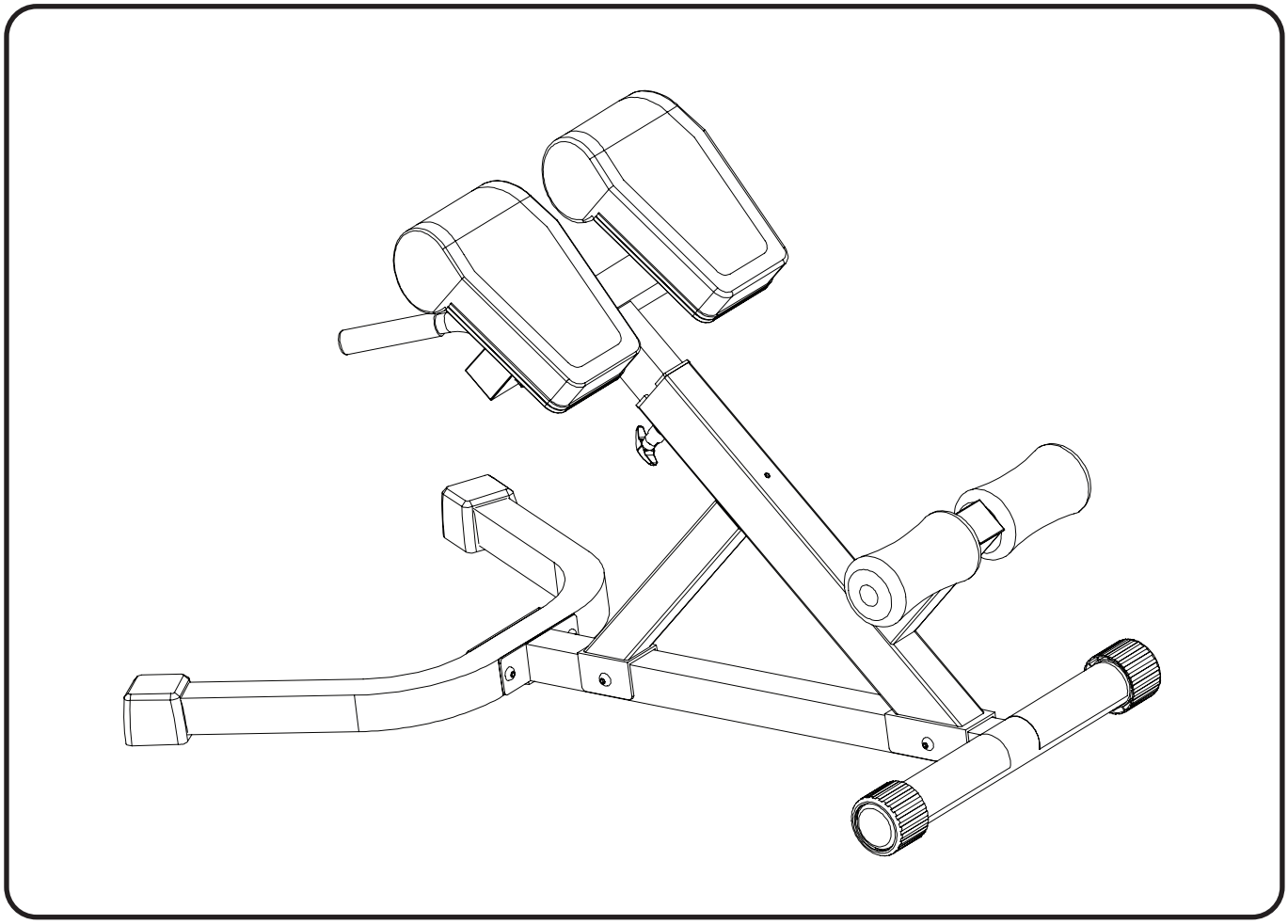

**!CAUTION**

Read all precautions and instructions in this manual before using this equipment.

8/09

# Table of Contents


| | |
|---|---|
| Before You Begin | 3 |
| Assembly | 4-8 |
| Parts List | 9 |
| Exploded View | 10 |
| Warranty Information | 11 |


**NOTE: Hand tighten bolts and lock nuts until machine is fully assembled.**

Prior to assembly, remove components from the box and verify that all the listed parts were supplied.

## SAFETY INFORMATION WARNING!

Before using this unit or starting any exercise program, consult your physician. This is especially important for persons over the age of 35 and/or persons with pre-existing health problems. XMARK Fitness assumes no responsibility for personal injury or property damage sustained by or through the use of this product.

It is the owner's responsibility to ensure that all users of this unit have read the Owner's Manual and are familiar with safety information and precautions.

## SAFETY PRECAUTIONS

- This unit should only be used on a level surface and is intended for indoor use only. XMARK Fitness recommends an equipment mat be placed under the unit to protect the floor or carpet and for easier cleaning.
- Wear comfortable, good-quality walking or running shoes and appropriate clothing. Do not use this unit with bare feet, sandals, socks or stockings!
- Always examine your unit before using to ensure all parts are in working order.
- Do not leave children unsupervised near or on the unit.
- Service to your unit should only be performed by an authorized service representative, unless authorized and/or instructed by a XMARK Fitness technician. Failure to follow these instructions will void the warranty.

**THANK YOU** for making this unit a part of your exercise program. XMARK Fitness assures the very best in value, appearance, durability and biomechanics.

This manual will guide you through the assembly process. If at any time you are having trouble with the assembly or use of this product, then please contact us at our XMARK Fitness help line. We have trained service technicians on site to take care of you, our valued customer.

## REGISTRATION CARD

To avoid unnecessary delays in warranty parts and to insure that a permanent record of your purchase is on file with our company, be sure to send in the warranty registration card or register online at www.xmarkfitness.com within 10 days of purchase.

## MAILING ADDRESS

XMARK Fitness
7501 Trammel Drive
Shreveport, LA 71108

**QUESTIONS?**
**CALL 1-800-719-4605**
**Monday-Friday**
**8:30 a.m.-5:00 p.m.**
*(Central Standard Time)*

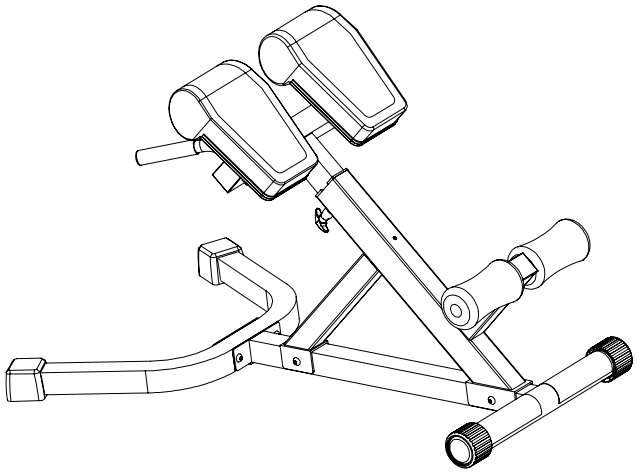

XMARK FITNESS SERIES
**MODEL: XM-4428**

***When calling please have the following product information available:***

**Model Name : XM-4428**

**Date Mfg.:**

**Serial #**

*Model Name Decal Location*

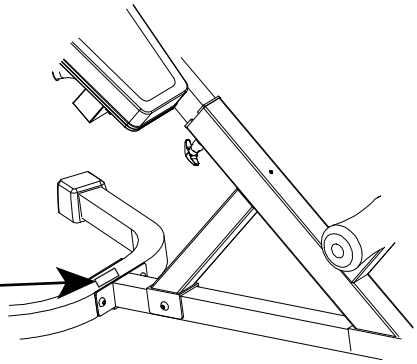

**NOTE: Hand tighten bolts and lock nuts until machine if fully assembled.**

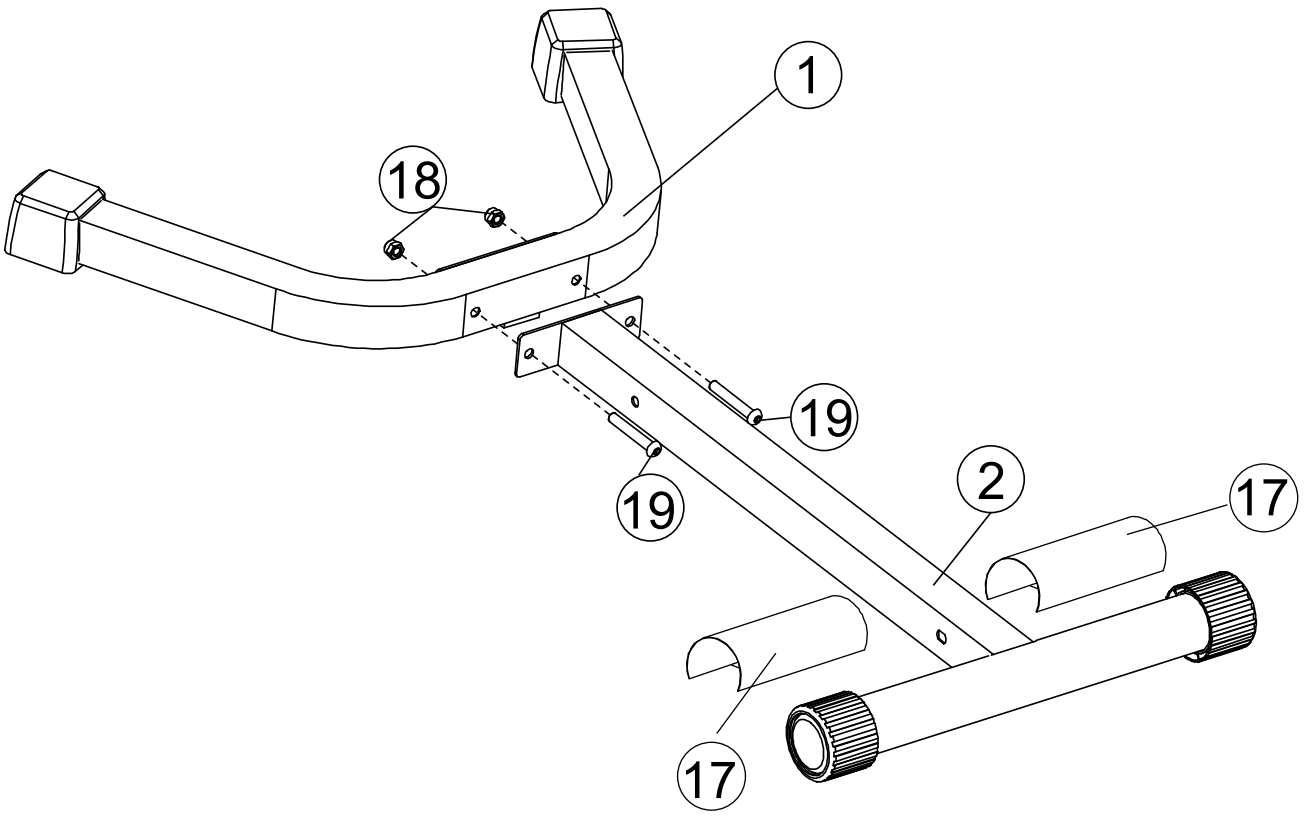


## STEP 1

Connect the Main Frame (2) to U Base Frame (1) and secure it with M10X70 Bolts (19) and Lock Nuts (18).

Make sure that the Main Frame show Non Skid Pad (17) is facing up when connecting to the U Base Frame (1).

**NOTE: Hand tighten bolts and lock nuts until machine if fully assembled.**

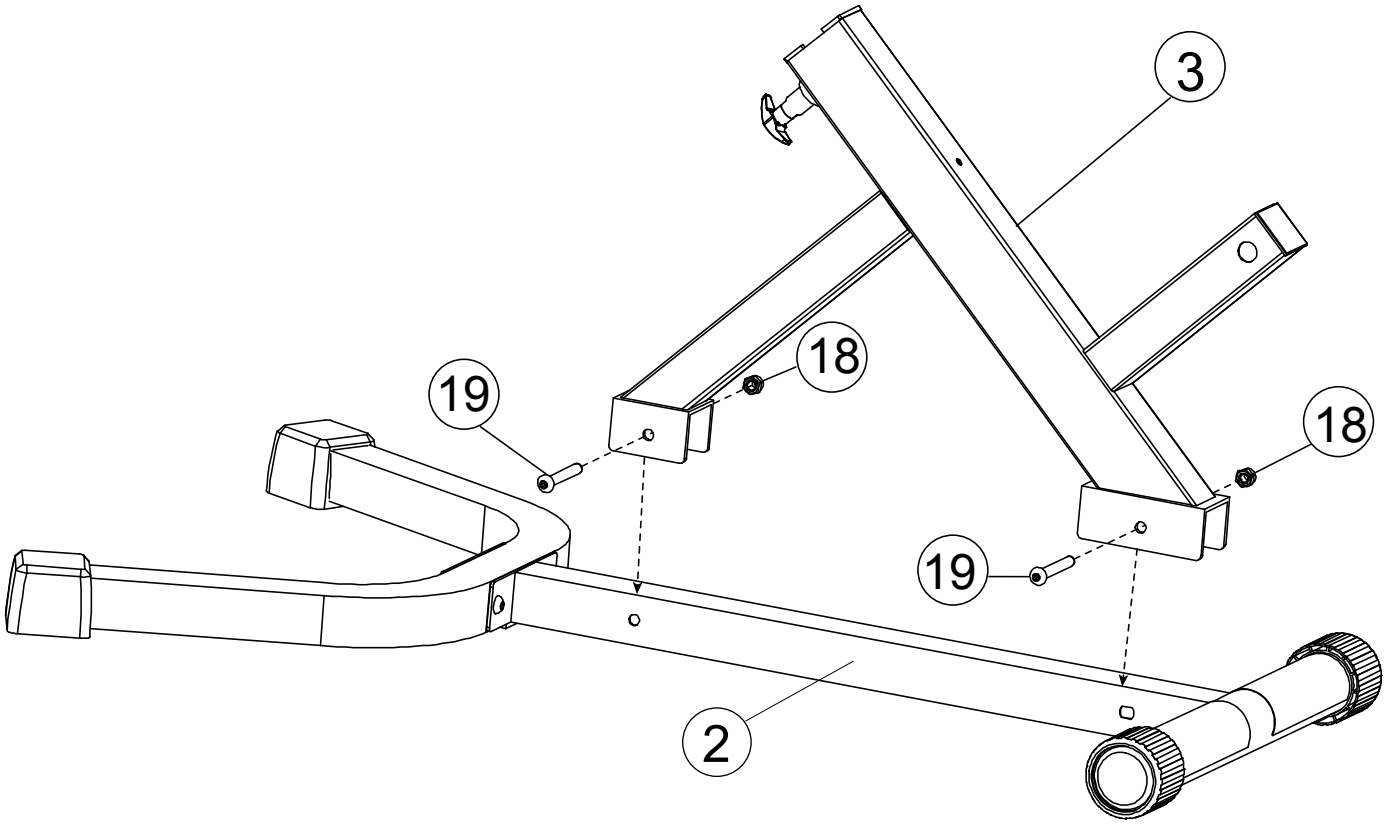


## STEP 2

Slide Main Upright (3) down onto Main Frame (2) and secure with M10X70MM Bolts (19) and Lock Nuts (18).

**NOTE: Hand tighten bolts and lock nuts until machine if fully assembled.**

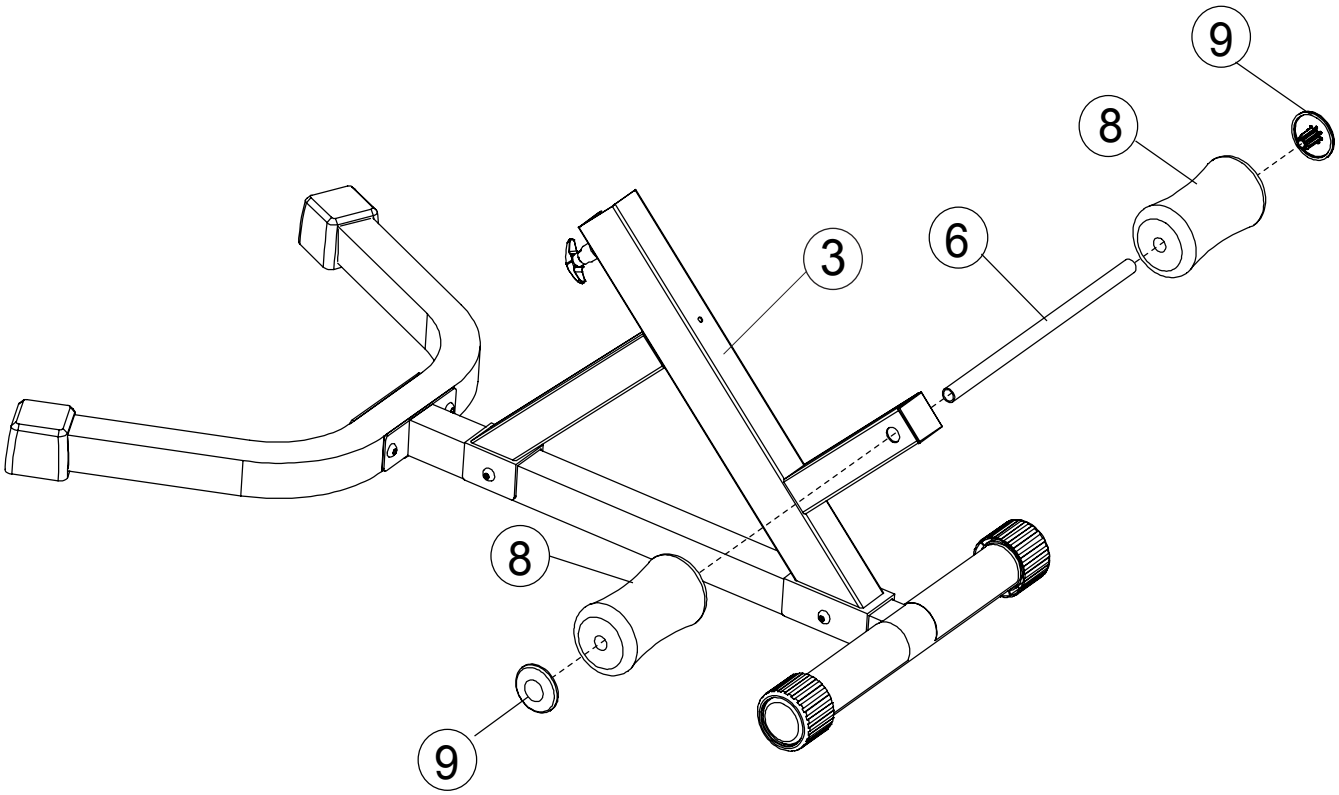


## STEP 3

Slide Foam Roller Tube (6) into Main Upright (3). Place Foam Rollers (8) onto Foam Roller Tube (6) and secure with Foam Roller Caps (9).

**NOTE: Hand tighten bolts and lock nuts until machine if fully assembled.**

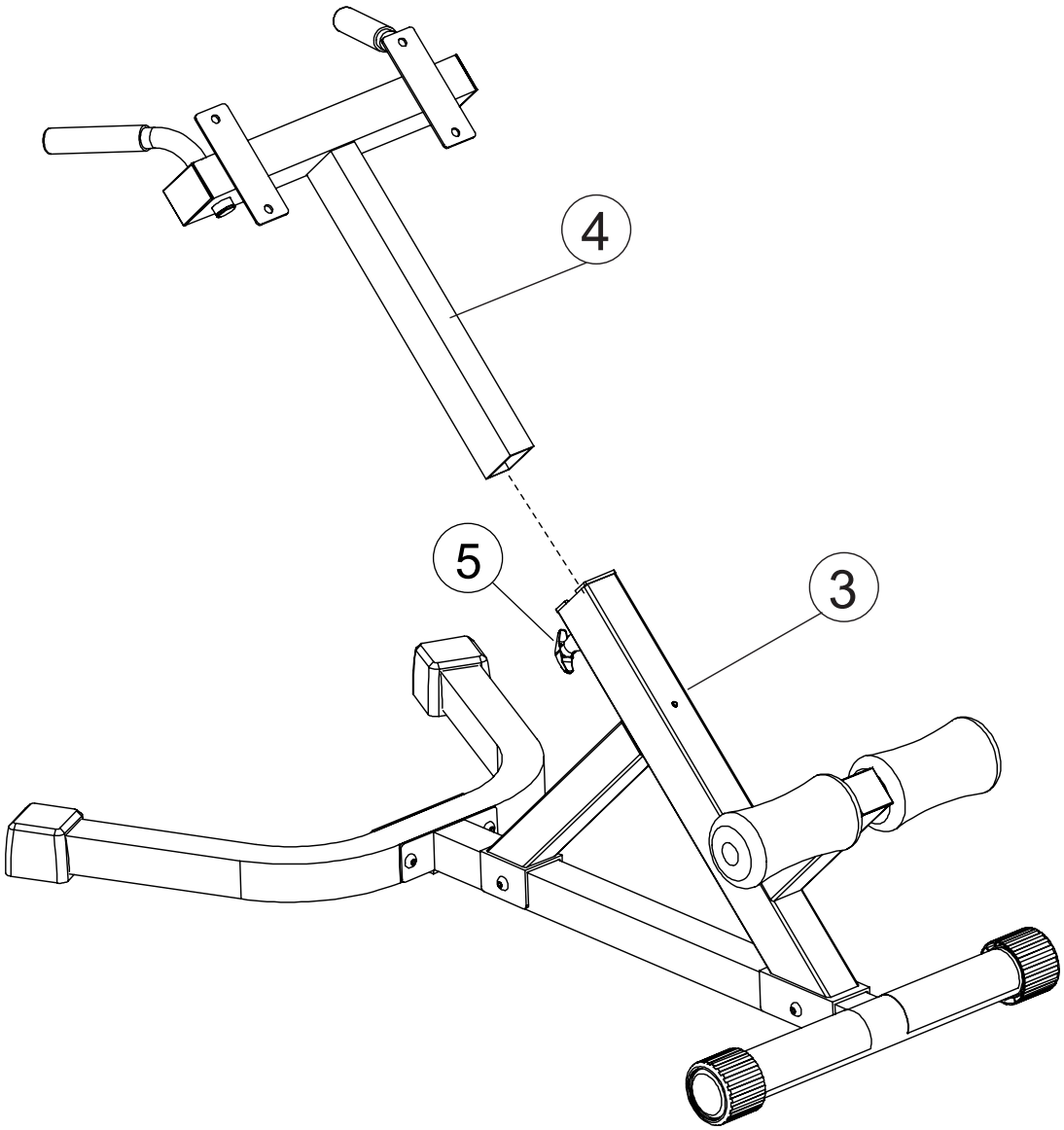


## STEP 4

Slide Adjustment Frame (4) into Main Upright (3). Pull Pop Pin (5) in order to choose different settings in Adjustment Frame (4).

**NOTE: Hand tighten bolts and lock nuts until machine if fully assembled.**

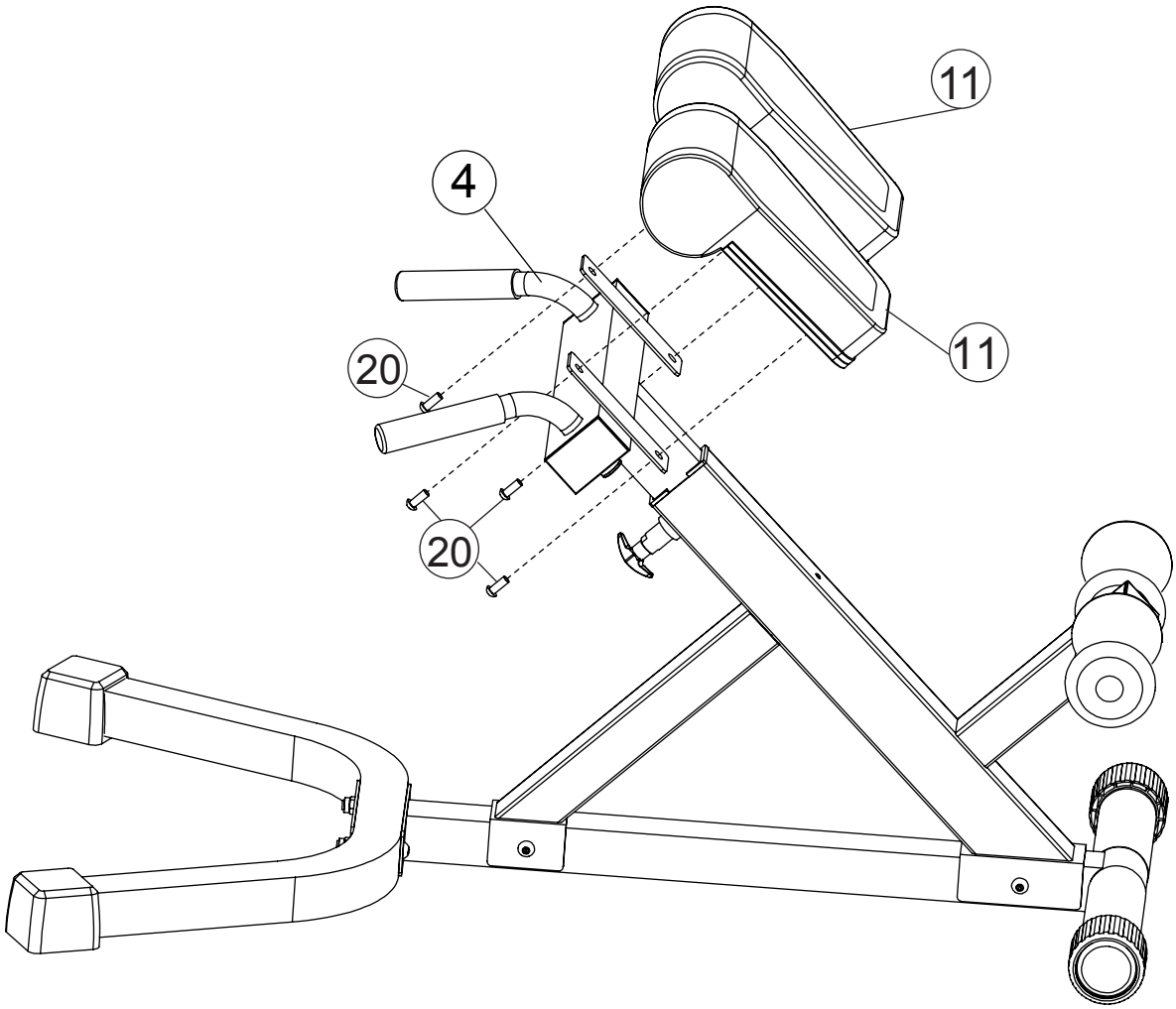


## STEP 5

Secure Pads (11) to Adjustment Frame (4) with M8X15mm Bolts (20).

# XM-4428 Parts List

| Key NO. | Part No. | Description | Qty |
|---|---|---|---|
| 1 | 204053604503 | BASE FRAME, U-SHAPED, XM - 4428 | 1 |
| 2 | 204053601503 | MAIN FRAME, XM - 4428 | 1 |
| 3 | 204053602503 | MAIN UPRIGHT, XM - 4428 | 1 |
| 4 | 204053603503 | ADJUSTMENT FRAME, XM - 4428 | 1 |
| 5 | 802900300002 | POP PIN, LOCKING T-SHAPED | 1 |
| 6 | 204054001503 | FOAM ROLLER TUBE | 1 |
| 7 | 307010000042 | SQUARE END FOOT 50 | 2 |
| 8 | 307010001917 | FOAM ROLLER | 2 |
| 9 | 307010000404 | FOAM ROLLER CAP | 2 |
| 10 | 307010000790 | GLIDE PLASTIC SLEEVE | 2 |
| 11 | 307040000206 | PAD | 2 |
| 12 | 307010000270 | PLUG, INNER SQUARE 50 | 1 |
| 13 | 307010000956 | HANDLE GRIP | 2 |
| 14 | 307010000412 | PLUG, INNER ROUND 25 | 2 |
| 15 | 307010000028 | TRANSPORT WHEEL, ROUND 60 | 2 |
| 16 | 307010000250 | PLUG, INNER RECTANGULAR 75X50 | 2 |
| 17 | 309990200035 | NON SKID PAD | 2 |
| 18 | 306010022504 | LOCK NUT, M10 | 4 |
| 19 | 306010020728 | ALLEN BOLT, M10X70MM | 4 |
| 20 | 306010020704 | ALLEN BOLT, M8X15MM | 4 |
| 21 | 308030000284 | MANUAL XM - 4428 | 1 |
| 22 | 299053604500 | BOLT PACK | 1 |
| 23 | 306990000144 | WRENCH, ALLEN S=6 | 1 |

# Exploded View

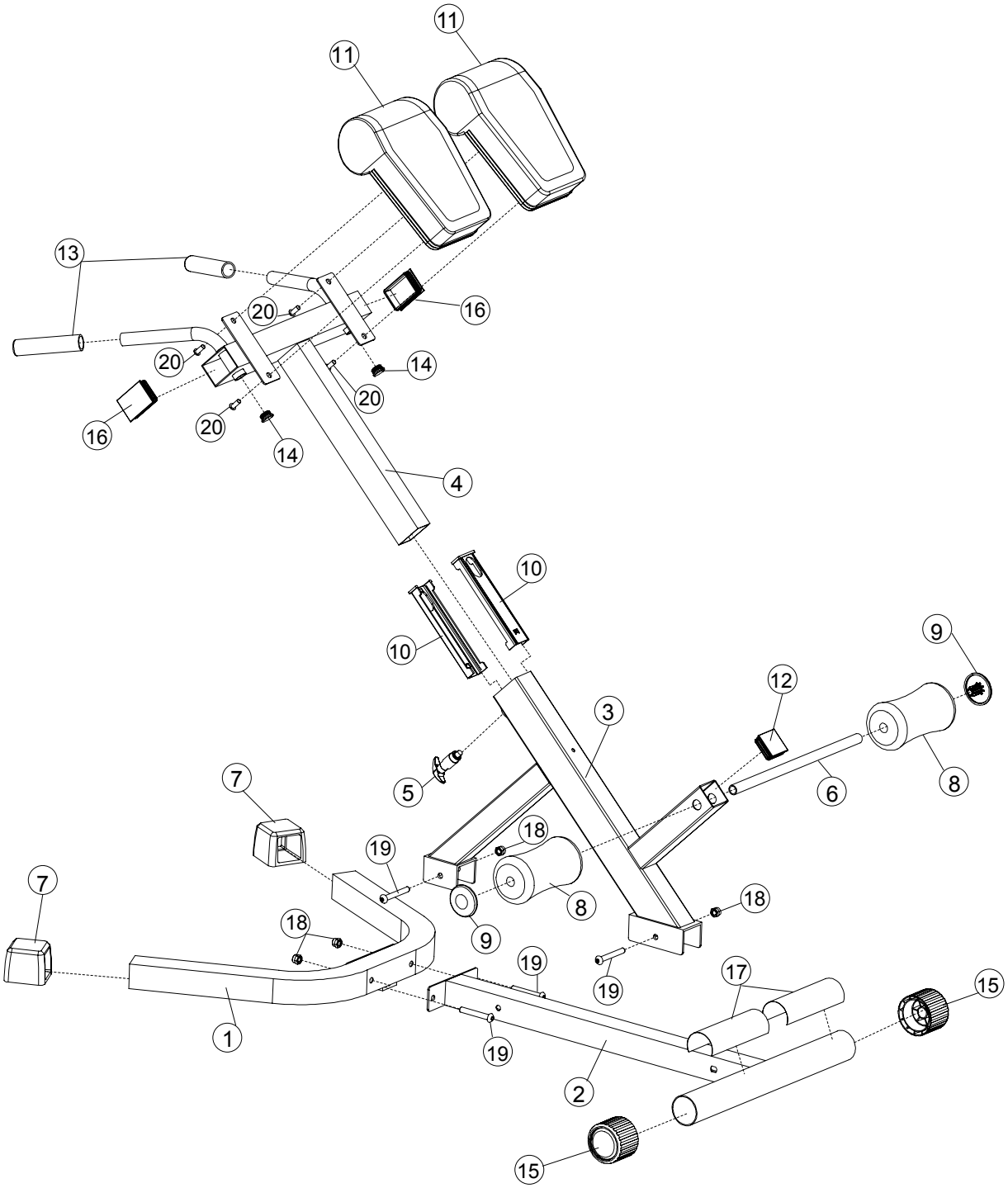

**XMARK Fitness**

**7501 Trammel Drive**

**Shreveport, LA  71108**

**Customer Service:  1-800-719-4605**