MARK FITNESS

XM-4421

OLYMPIC BENCH with LEG

Owner's Manual

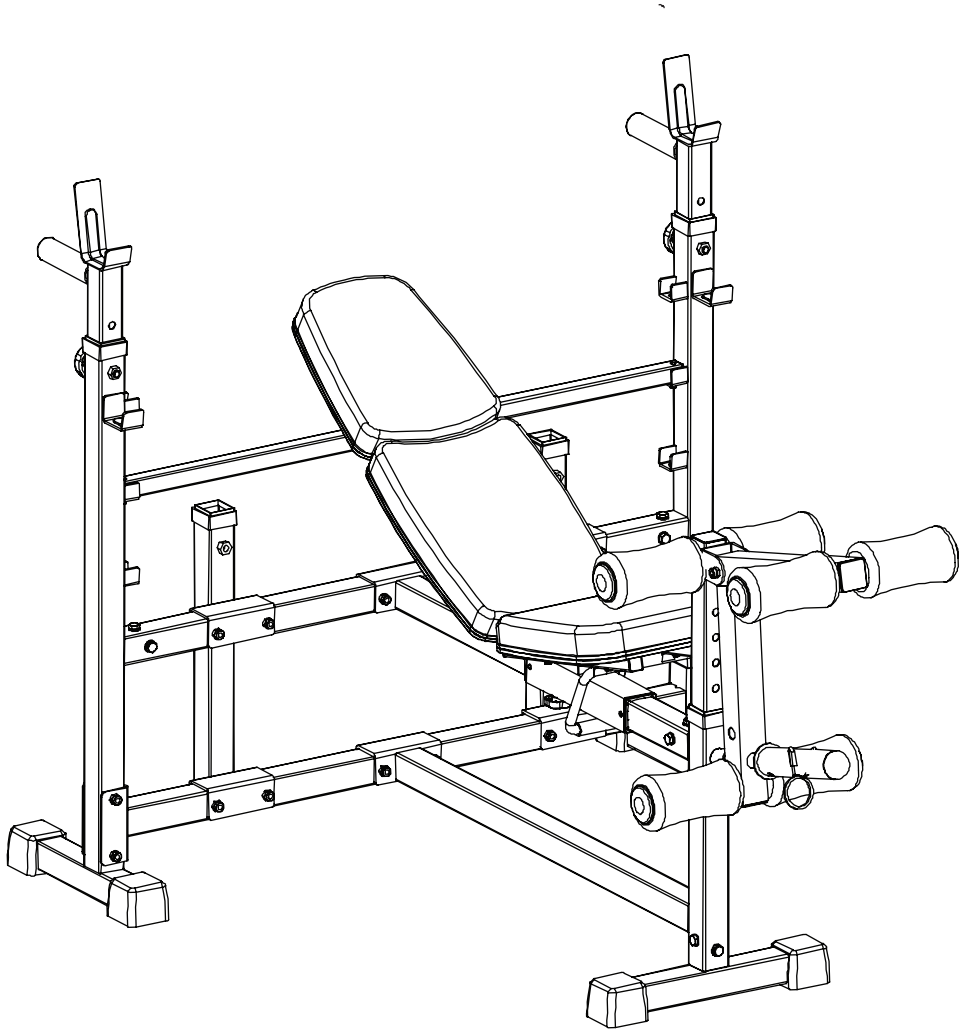

! CAUTION

Read all precautions and instructions in this manual before using this equipment.

8/09

Table of Contents

Before You Begin	3
Assembly	4-8
Parts List	9
Exploded View	10-11
Warranty Information	12

SAFETY INFORMATION WARNING!

Before using this unit or starting any exercise program, consult your physician. This is especially important for persons over the age of 35 and/or persons with pre-existing health problems. XMARK Fitness assumes no responsibility for personal injury or property damage sustained by or through the use of this product.

It is the owner's responsibility to ensure that all users of this unit have read the Owner's Manual and are familiar with safety information and precautions.

SAFETY PRECAUTIONS

- This unit should only be used on a level surface and is intended for indoor use only. XMARK Fitness recommends an equipment mat be placed under the unit to protect the floor or carpet and for easier cleaning.
- Wear comfortable, good-quality walking or running shoes and appropriate clothing. Do not use this unit with bare feet, sandals, socks or stockings!
- Always examine your unit before using to ensure all parts are in working order.
- Do not leave children unsupervised near or on the unit.
- Service to your unit should only be performed by an authorized service representative, unless authorized and/or instructed by a XMARK Fitness technician. Failure to follow these instructions will void the warranty.

NOTE: Hand tighten bolts and nylon nuts until machine is fully assembled.

Prior to assembly, remove components from the box and verify that all the listed parts were supplied.

Before You Start

THANK YOU for making this unit a part of your exercise program. XMARK Fitness assures the very best in value, appearance, durability and biomechanics.

This manual will guide you through the assembly process. If at any time you are having trouble with the assembly or use of this product, then please contact us at our XMARK Fitness help line. We have trained service technicians on site to take care of you, our valued customer.

REGISTRATION CARD

To avoid unnecessary delays in warranty parts and to insure that a permanent record of your purchase is on file with our company, be sure to send in the warranty registration card or register online at www.xmarkfitness.com within 10 days of purchase.

MAILING ADDRESS

XMARK Fitness
7501 Trammel Drive
Shreveport, LA 71108

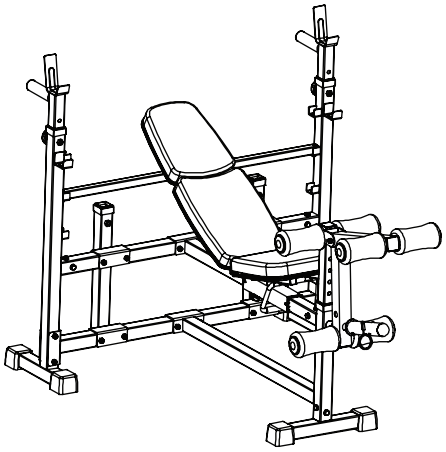

QUESTIONS?
CALL 1-800-719-4605
Monday-Friday
8:30 a.m.-5:00 p.m.
(Central Standard Time)

XMARK FITNESS SERIES
MODEL: XM-4421

When calling please have the following product information available:

Model Name : XM-4421

Date Mfg.:

Serial #

Model Name Decal Location

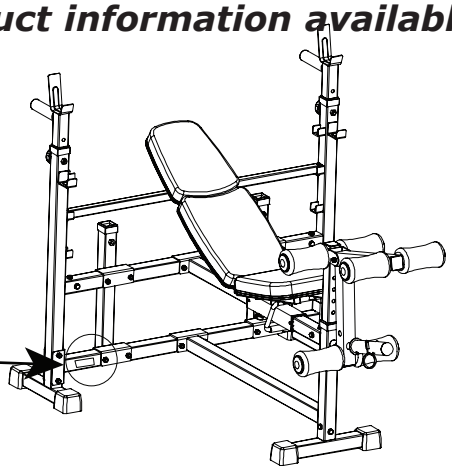

NOTE: Hand tighten bolts and lock nuts until machine is fully assembled.

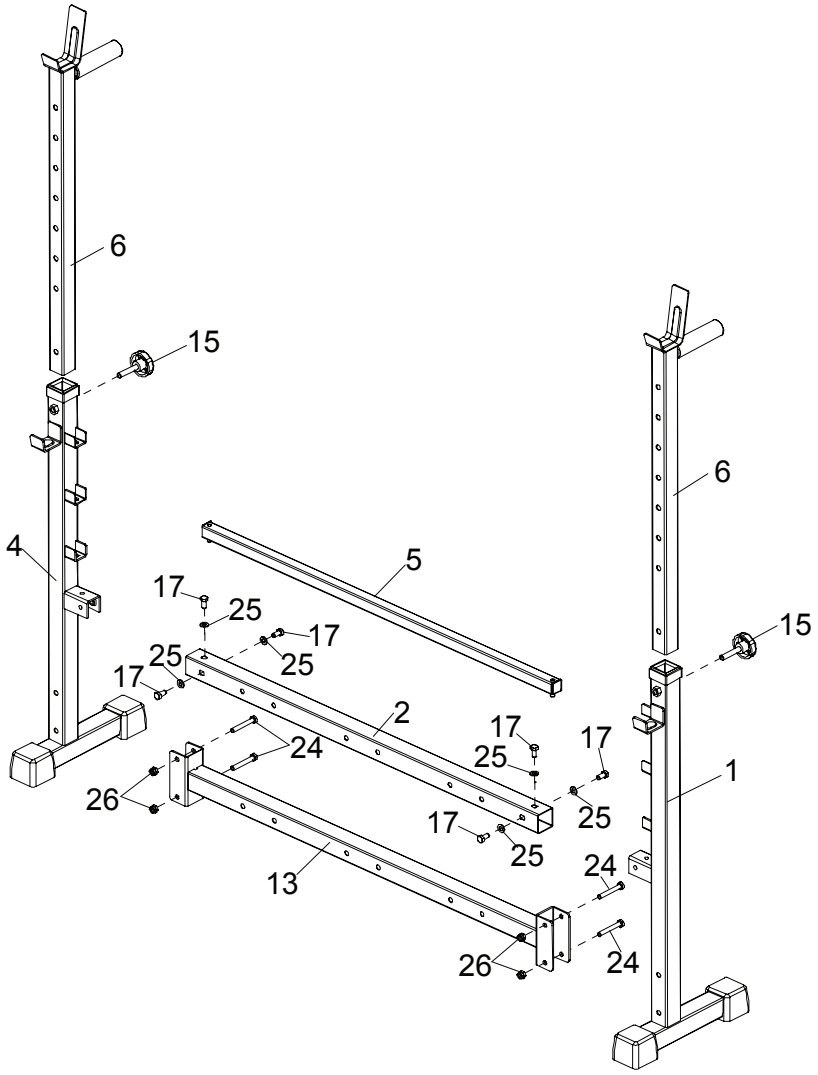

STEP 1

Connect the Right Upright (4) and Left Upright (1) with the Lower Cross Bar (13) using four M10X70 Bolts (24) and four M10 Lock Nuts (26).

Connect the Right Upright (4) and Left Upright (1) with the Upper Cross Bar (2) using six M10X20 Bolts (17) and six M10 Washers(25).

Insert the Weight Rests (6) into the right and left Uprights (4) and (1). Secure with Knob Bolts (15).

Set the pins on the Adjustment Tube (5) into a set of brackets located on Left and Right Upright (1) (4).

NOTE: Hand tighten bolts and lock nuts until machine is fully assembled.

STEP 2

Join Dip Stand Holders (14) onto Lower Cross Bar (13) and Upper Cross Bar (2). Secure with eight M10 x 70 Bolts (24) and eight M10 Lock Nuts (26).

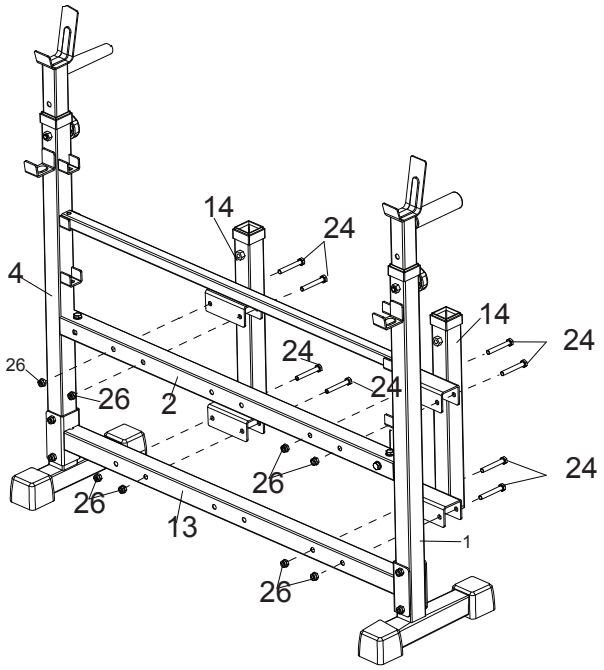

STEP 3

Slide Seat Adjustment Carriage (43) onto Adjustable Seat Brace (42) as illustrated.

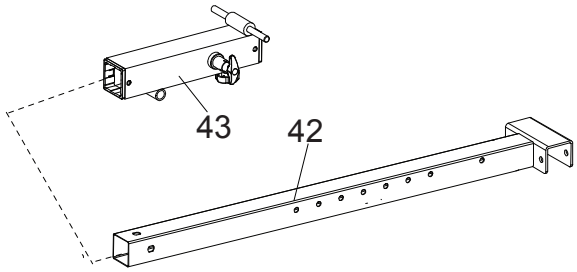

STEP 4

Insert Main Frame (3) into Adjustable Seat Brace (42) with three M10 x20 Bolts (17) and three M10 Washers (25).

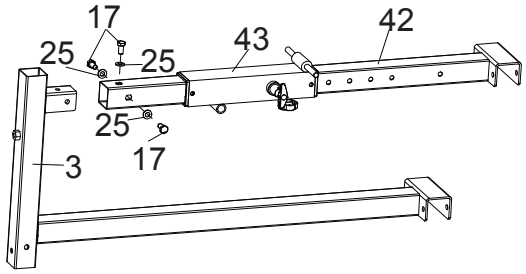

NOTE: Hand tighten bolts and locknuts until machine is fully assembled.

STEP 5

Insert Front Base (9) into Bottom of Main Frame (3) with three M10 x 20 Bolts (17) and three M10 Washers (25).

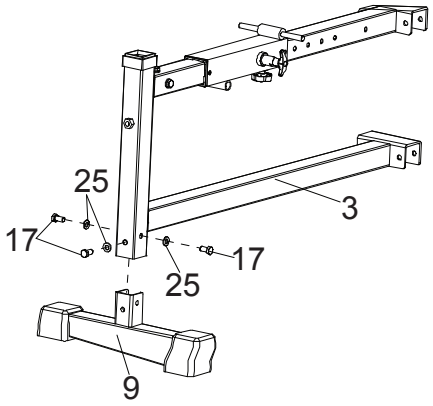

STEP 6

Connect Main Frame (3) and Lower Cross Brace (13) with two M10 x 75 Bolts (24) and two M10 Locknuts (26).Connect Adjustable Seat Brace(42) and Upper Cross Brace (2) with two M10 x 75 Bolts (24) and two M10 Locknuts (26).

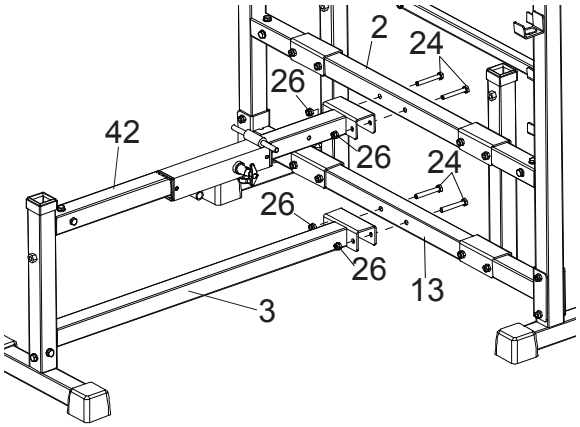

STEP 7

Attach the Seat Pad (11) to the Seat Supports (40) using four M6 Washers (28) and four M6X40 Bolts (27).

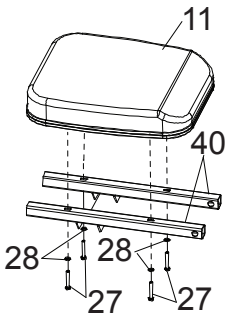

NOTE: Hand tighten bolts and lock nuts until machine is fully assembled.

STEP 8

Attach the Upper Back Pad (10) and Lower Back Pad (31) to the Backrest Supports (12) using eight M6 Washers (28) and eight M6X40 Bolts (27).

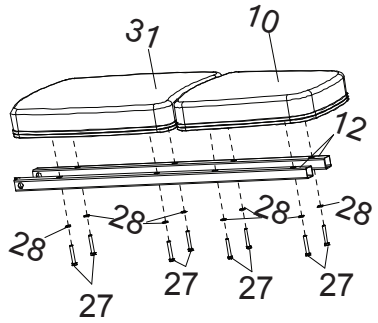

STEP 9

Slide Seat Supports (40) and Backrest Supports (12) to the seat-rod on Seat Adjustment Carriage (43). Tighten the M6x40 Bolts (27) assembled in Step 7 and Step 8 (not shown in Step 9).

Align Pop Pin (39) with hole on Seat Adjustable Sleeve (43) and Fasten Thrust Knob (41) to stabilize.

Insert the short end of the Seat Adjustment Bar (38) into Seat Adjustment Carriage (43) as shown.

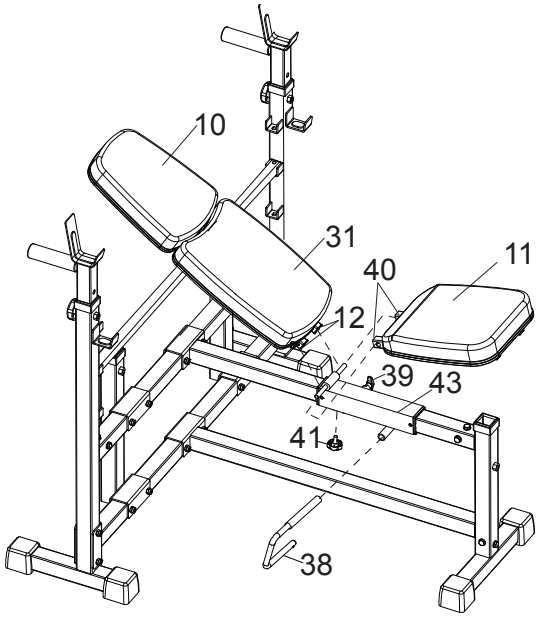

NOTE: Hand tighten bolts and lock nuts until machine is fully assembled.

STEP 10

Insert the Leg Lever Holder (7) into the Main Frame (3) and secure with Knob Bolt (15).

Install the Leg Lift Bar (8) to bracket of Leg Lever Holder (7) using one M10X75 Bolt (24), two Spacers (34) and one M10 Lock Nut (26).

To use olympic weights, secure the Olympic Sleeve (35) to the weight tube on the Leg Lift Bar (8) using the set screw (pre-assembled).

Make sure the set screw is on the bottom of the adapter. Secure the weight plates (not included) with the 2" Spring Clip (37).

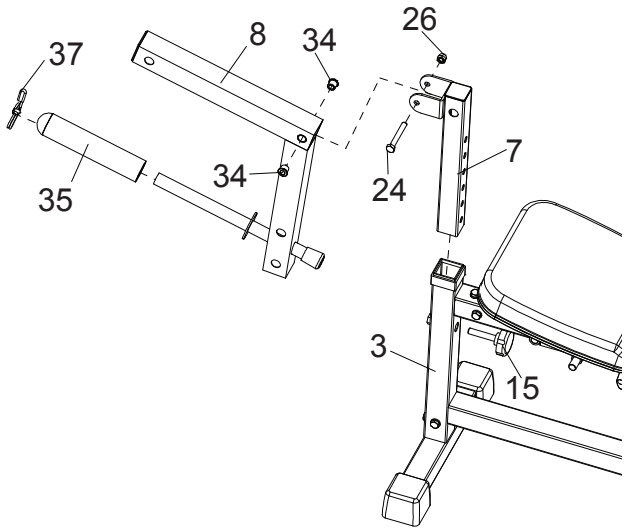

STEP 11

Insert the Foam Roller Tubes (36) into Leg Lift Bar (8) and Leg Lever Holder (7). Slide Foam Rollers (33) onto each end of Foam Roller Tubes (36) and secure in place using Foam Roller Caps (22).

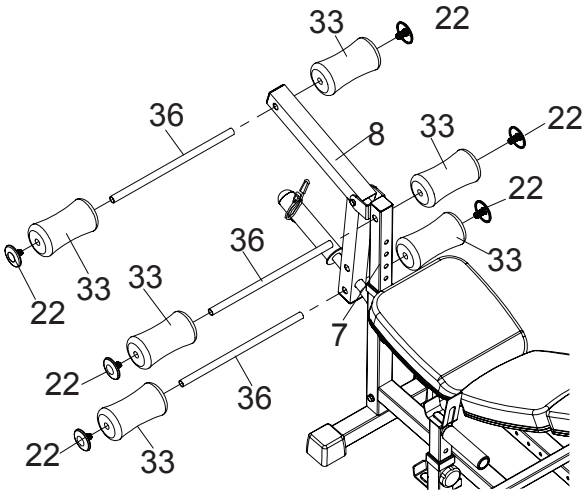

Congratulations!! You have completed assembly of your XM-4421.

XM-4421 Parts List

Key NO.	Part No.	Description	QTY
1	204025316503	Left Upright	1
2	204025317503	Upper Cross Bar	1
3	204056407503	Main Frame	1
4	204025323503	Right Upright	1
5	204025302503	Adjustment Tube	1
6	204025320503	Weight Rest	2
7	204056303503	Leg Lever Holder	1
8	204056401503	Leg Lift Bar	1
9	204056406503	Front Base	1
10	307040000735	Upper Back Pad	1
11	307040000734	Seat Pad	1
12	204056402503	Backrest Support	2
13	204025318503	Lower Cross Brace	1
14	204025319503	Dip Stand Holder	2
15	307010001308	Knob Bolt	3
16	307010000270	Square Plug 50	3
17	306010020036	Bolt M10X20	12
18	307010000714	Square Sleeve	5
19	307010002128	Dip Stand Grip	2
20	307010000410	Round Plug 25	1
21	307010000959	Foam Grip	1
22	307010000404	Foam Roller Cap	6
23	307010000042	Square End Foot 50	6
24	306010020048	Bolt M10X75	17
25	306010023108	Washer M10	12
26	306010022504	Lock Nut M10	17
27	306010020010	Bolt M6X40	12
28	306010023106	Washer M6	12
29	307010000210	Square Plug 25	8
30	202032220206	Bumper 25	1
31	307040000737	Lower Back Pad	1
32	307010000262	Square Plug 44	1
33	307010001917	Foam Roller	6
34	306990000050	Spacer	2
35	307010000759	Olympic Sleeve	1
36	204056301503	Foam Roller Tube	3
37	306990000080	2" Spring Clip	1
38	204022807002	Seat Adjustment Bar	1
39	802900300002	Locking Pop Pin	1
40	204025305503	Seat Support	2
41	307010001335	Thrust Knob	1
42	204025313503	Seat Adjustable Brace	1
43	204025314503	Seat Adjustment Carriage	1
44	307010000747	Plastic Bushing	2
45	307010000428	Round Plug 32	2
46	307010000221	Square Plug 30	2
47	299056404500	BOLT PACK	1
48	308030000332	MANUAL XM-4421	1

Exploded View

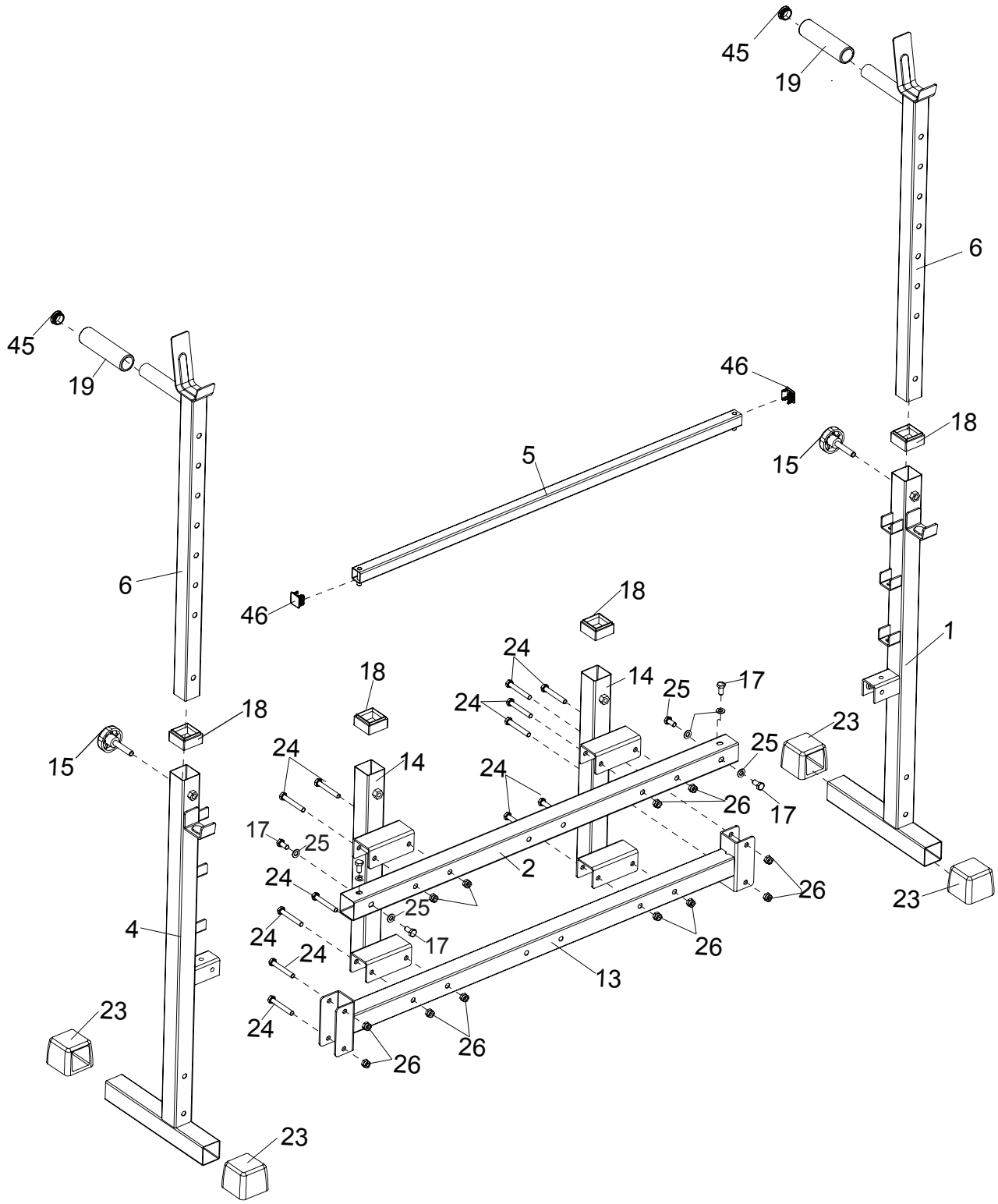

Exploded View

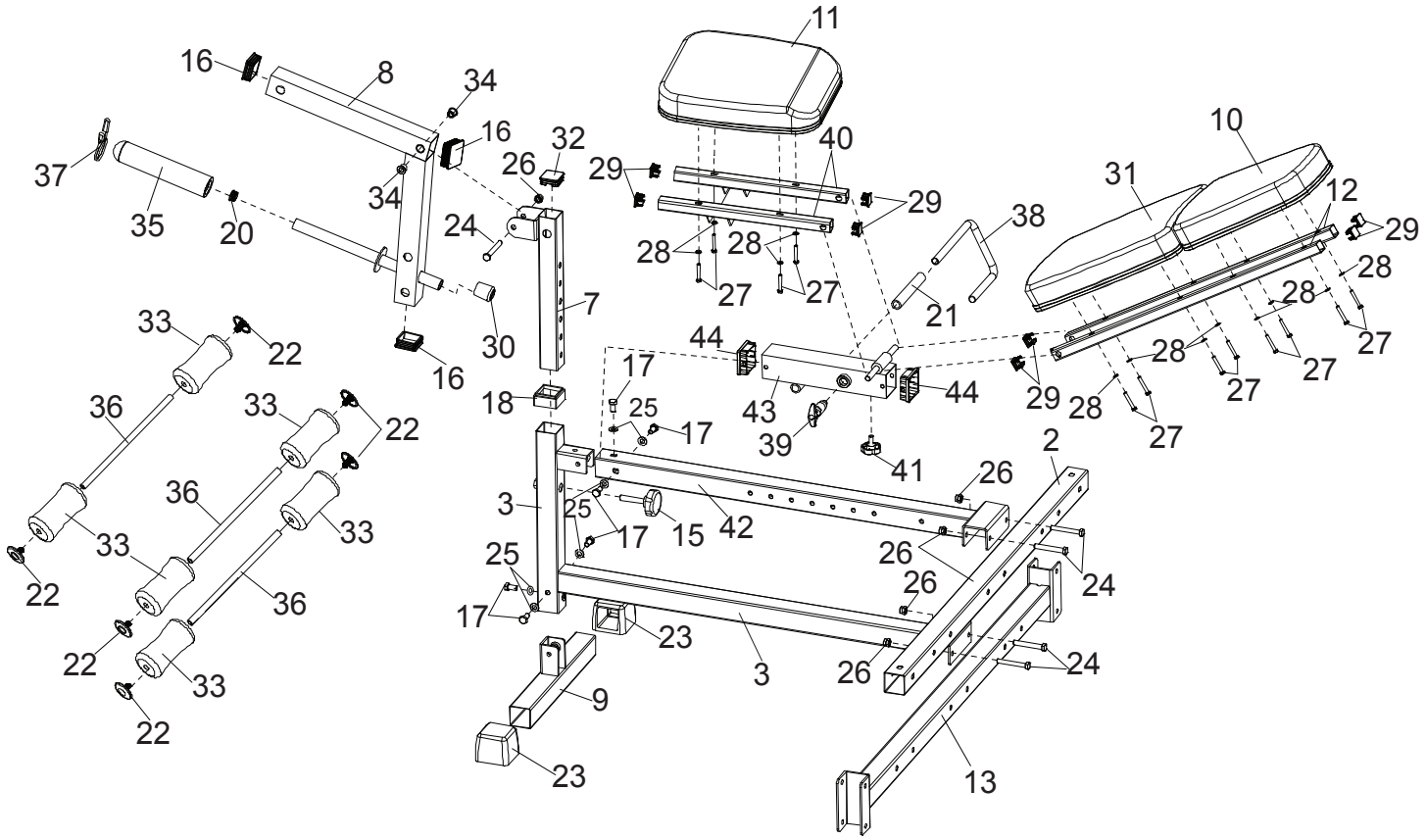

XMARK Fitness

7501 Trammel Drive

Shreveport, LA 71108

Customer Service: 1-800-719-4605